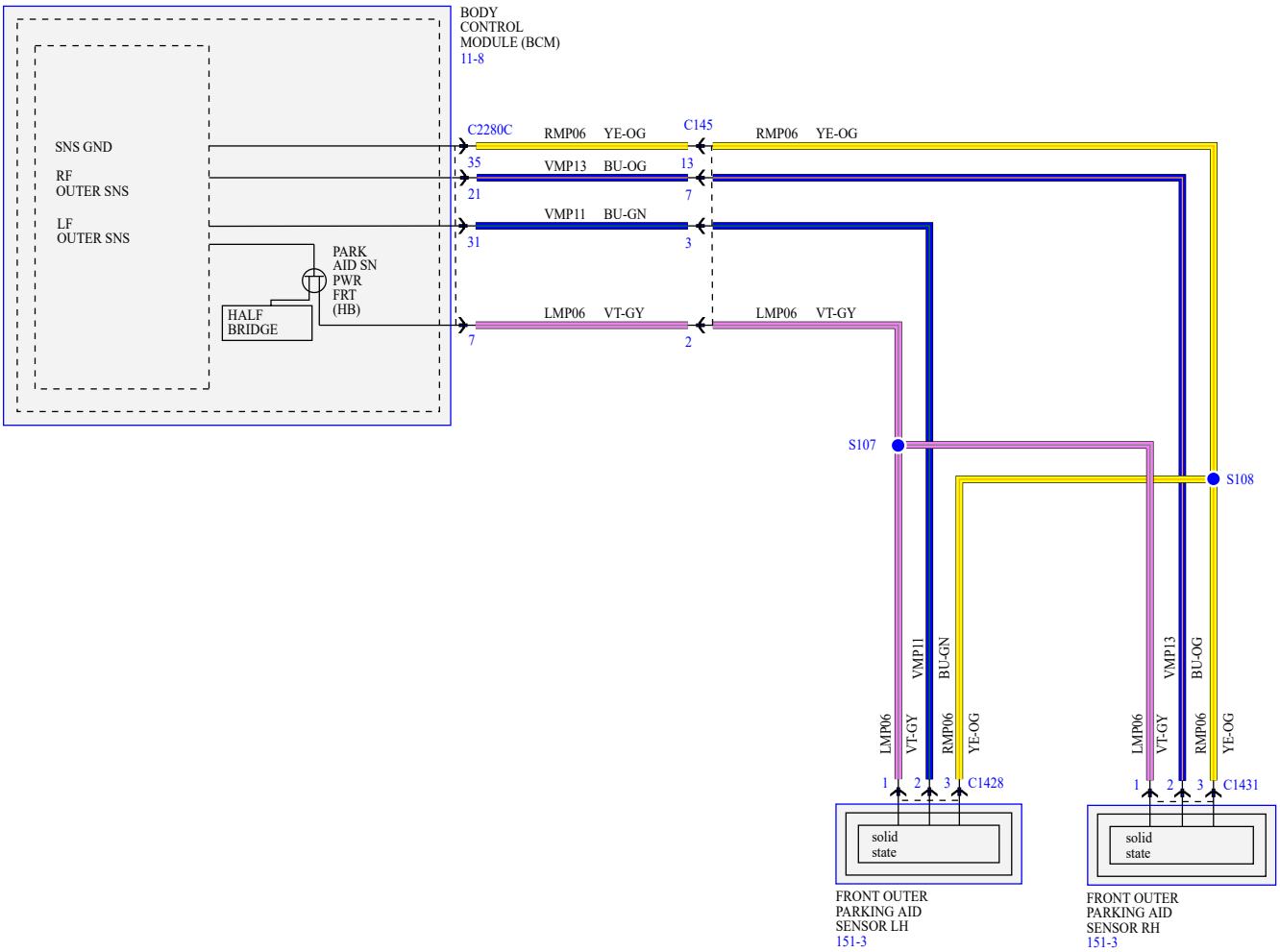FRONT PARKING AID