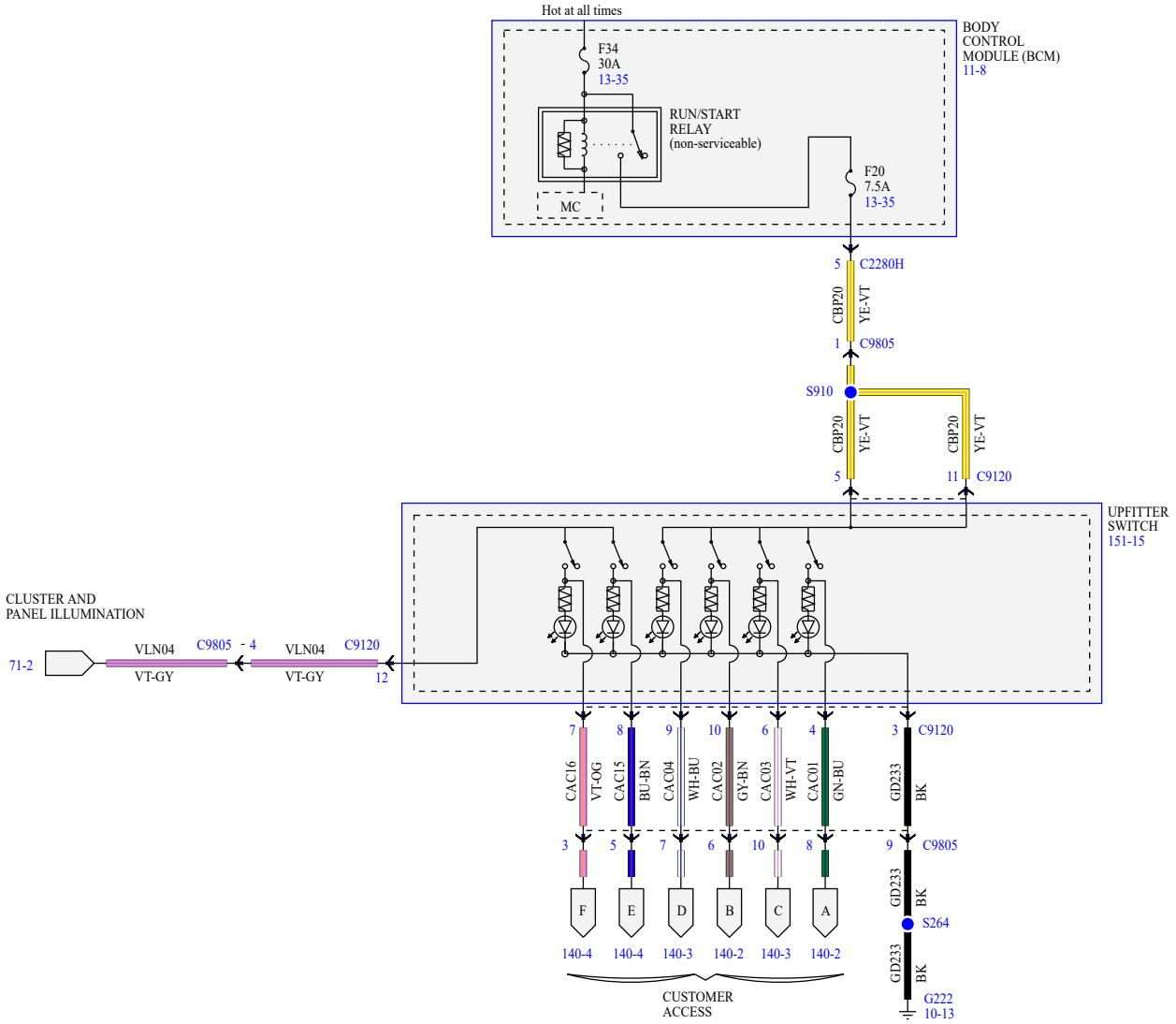
Hot at all times
BODY CONTROL MODULE (BCM) 11-8
F34 30A 13-35
RUN/START RELAY (non-serviceable)
MC
F20 7.5A 13-35
5 C2280H
CBP20 YE-VT
1 C9805
S910
CBP20 YE-VT 5
CBP20 YE-VT 11 C9120
UPFITTER SWITCH 151-15
CLUSTER AND PANEL ILLUMINATION
71-2
VLN04 VT-GY
C9805 4
VLN04 VT-GY
C9120 12
7 CAC16 VT-OG 3 F 140-4
8 CAC15 BU-BN 5 E 140-4
9 CAC04 WH-BU 7 D 140-3
10 CAC02 GY-BN 6 B 140-2
6 CAC03 WH-VT 10 C 140-3
4 CAC01 GN-BU 8 A 140-2
CUSTOMER ACCESS
3 C9120 GD233 BK
9 C9805 GD233 BK
S264
GD233 BK G222 10-13